# FloodLAMP Direct RNA Assays

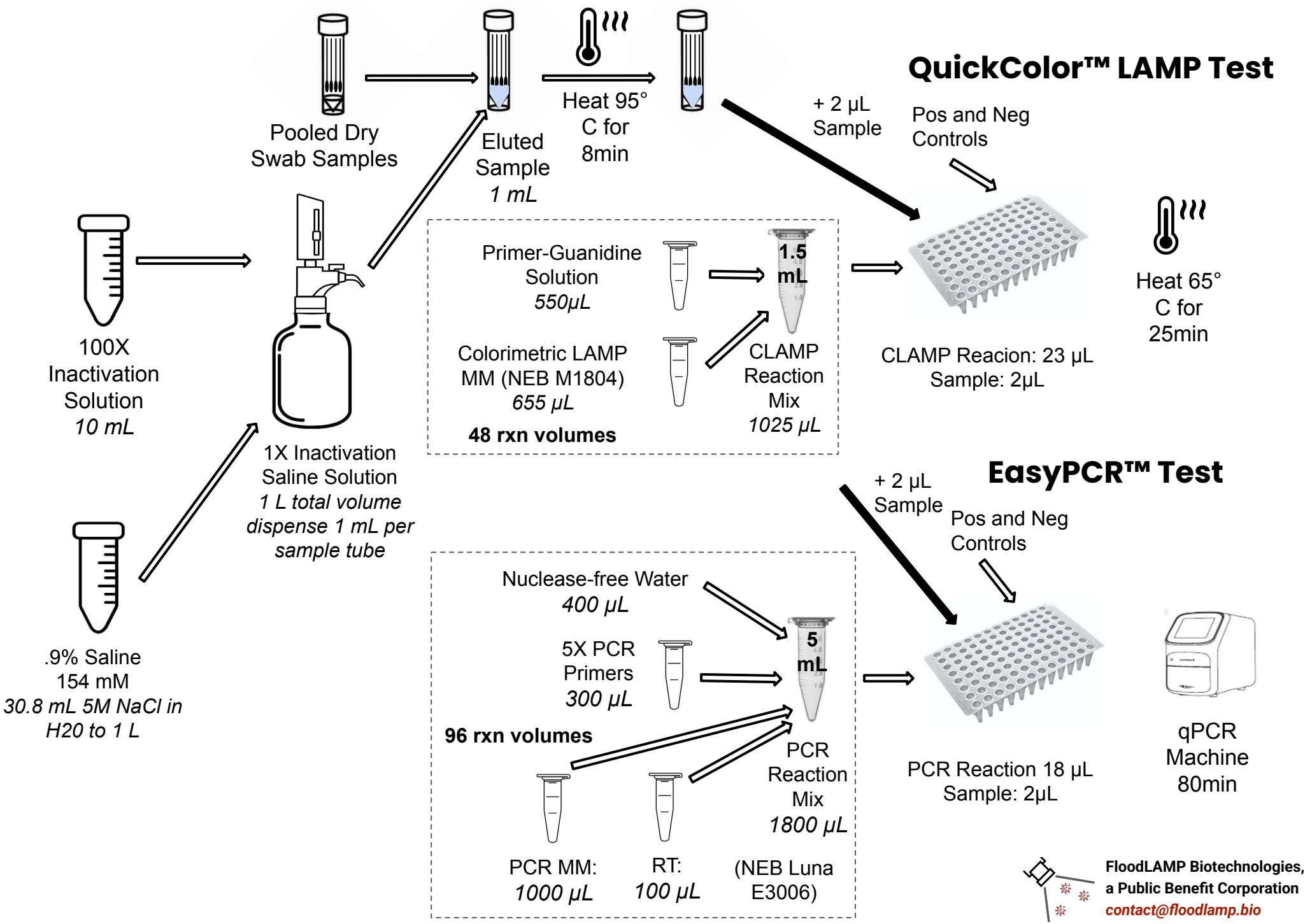



**FloodLAMP Biotechnologies, a Public Benefit Corporation**
*contact@floodlamp.bio*

# FloodLAMP Direct RNA Assays

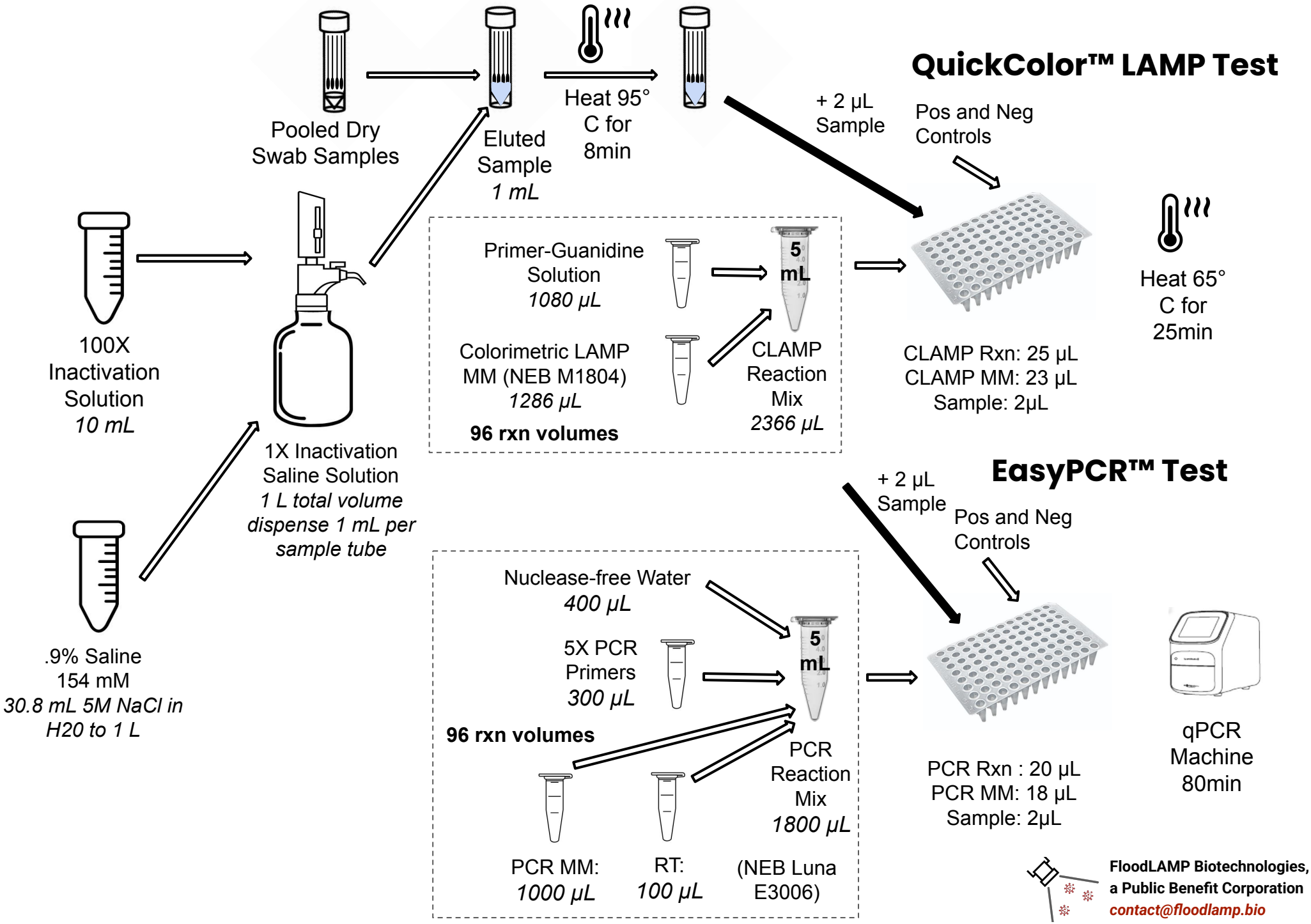



**FloodLAMP Biotechnologies, a Public Benefit Corporation**
*contact@floodlamp.bio*

# Validation: First Run

## QuickColor™ LAMP Test

+ 2 µL Sample

Pos and Neg Controls included in 24-tube sample plate

Primer-Guanidine Solution
*275 µL*

Colorimetric LAMP MM (NEB M1804)
*327 µL*

CLAMP Reaction Mix
*602 µL*
*(73 µL Fill)*

**24 rxn volumes**

CLAMP Rxn: 25 µL
CLAMP MM: 23 µL
Sample: 2µL

Heat 65° C for 25 min

## EasyPCR™ Test

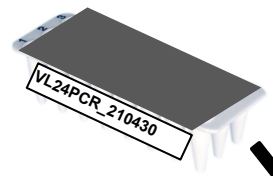


+ 2 µL Sample

Pos and Neg Controls included in 24-tube sample plate

Nuclease-free Water
*79µL*

5X PCR Primers
*105 µL*

**24 rxn volumes**

PCR Reaction Mix
*473 µL*
*(57 µL Fill)*

(NEB Luna E3006)

PCR MM:
*263 µL*

PCR RT:
*26.3 µL*

PCR Rxn : 20 µL
PCR MM: 18 µL
Sample: 2µL

qPCR Machine 80 min

**FloodLAMP Biotechnologies, a Public Benefit Corporation**
***contact@floodlamp.bio***

# Gamma Contrived Positive Diagram

Gamma Contrived Positive v1.3

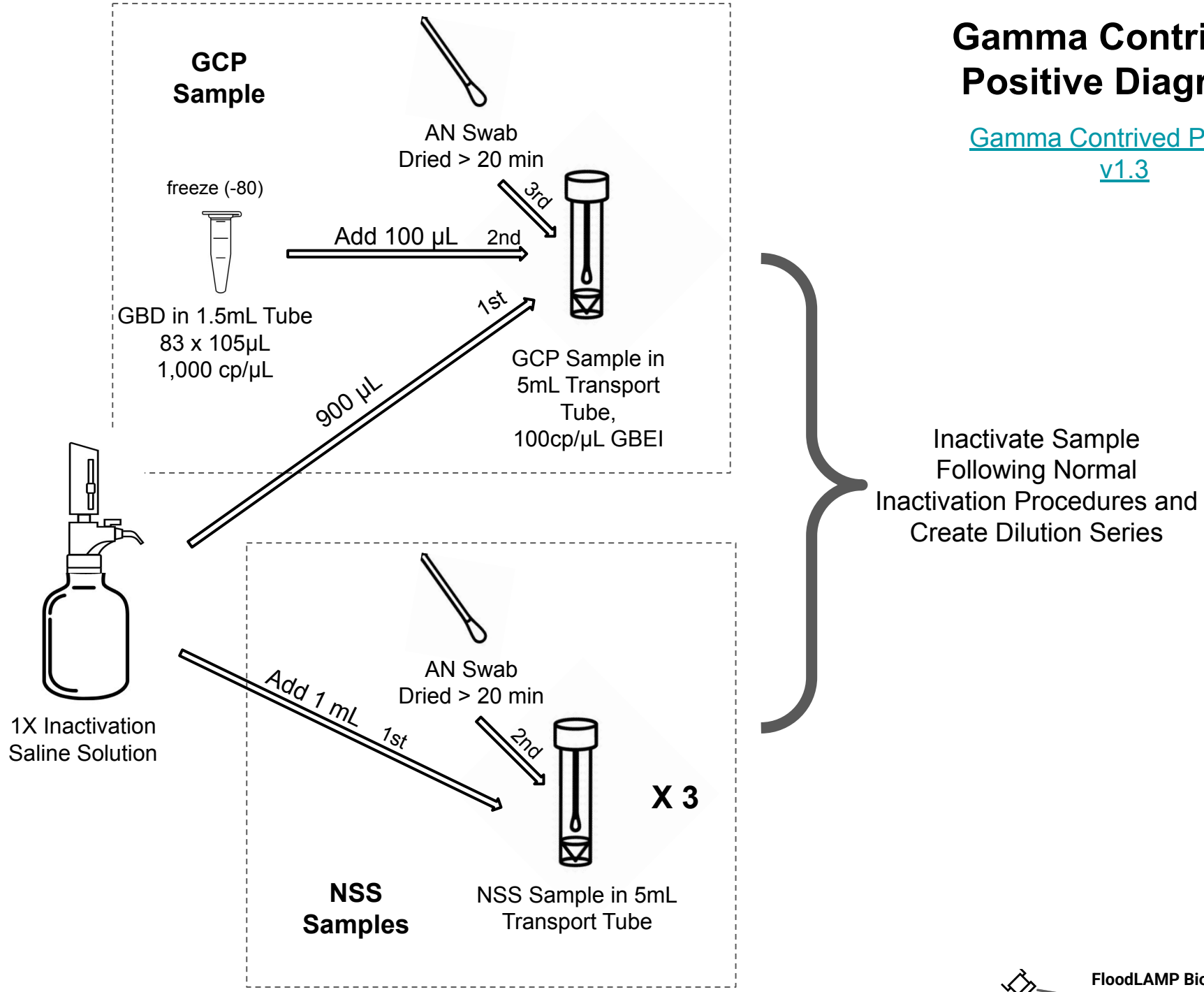


FloodLAMP Biotechnologies, a Public Benefit Corporation
*contact@floodlamp.bio*

# 100X Inactivation Solution XL Diagram

100X Inactivation Solution XL
Batch Record v1.0

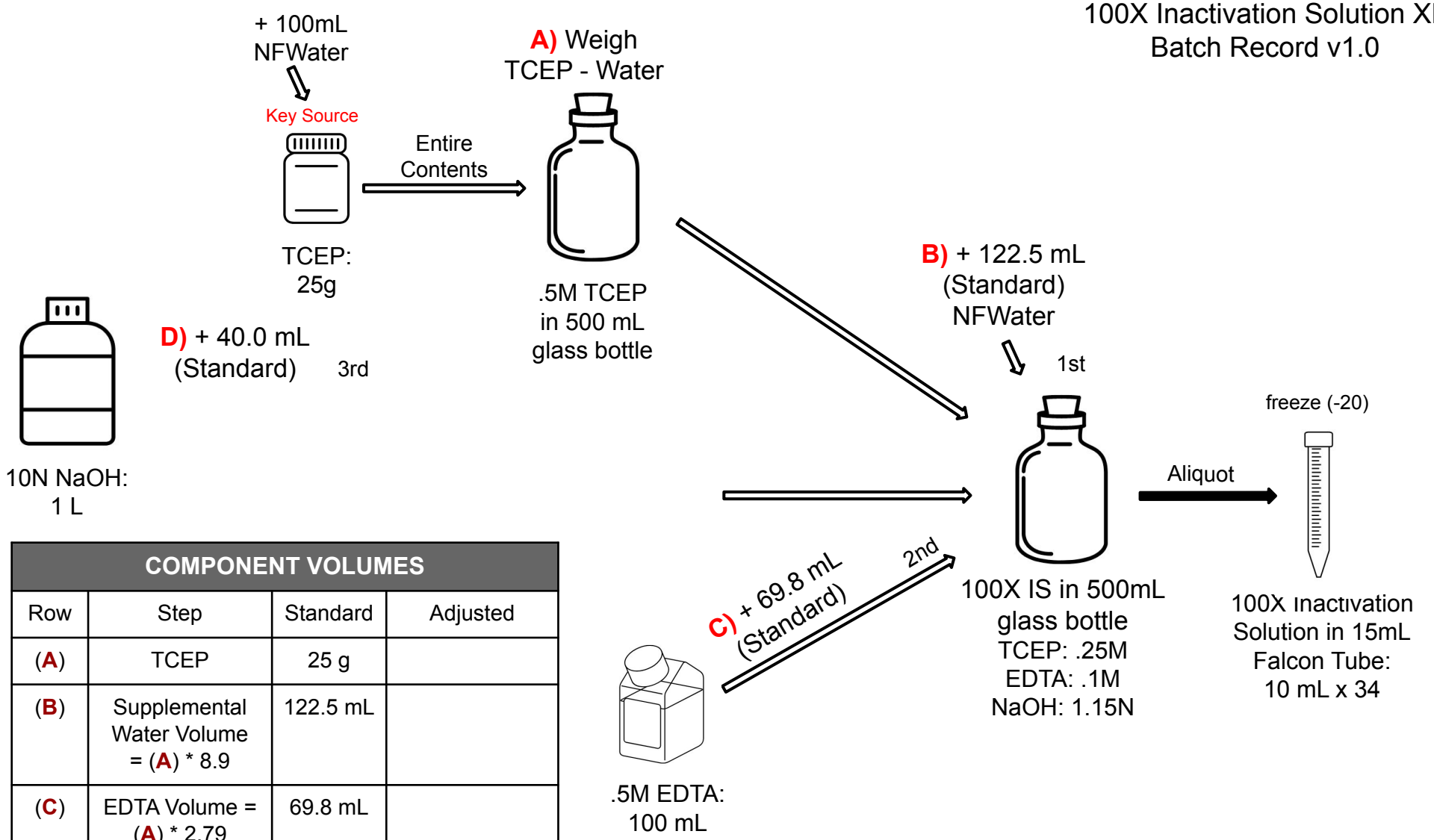


| COMPONENT VOLUMES | | | |
|---|---|---|---|
| Row | Step | Standard | Adjusted |
| (**A**) | TCEP | 25 g | |
| (**B**) | Supplemental Water Volume = (**A**) * 8.9 | 122.5 mL | |
| (**C**) | EDTA Volume = (**A**) * 2.79 | 69.8 mL | |
| (**D**) | NaOH Volume = (**A**) * 1.6 | 40.0 mL | |


**FloodLAMP Biotechnologies, a Public Benefit Corporation**
*contact@floodlamp.bio*

# 1X Inactivation Saline Solution Diagram

From Inactivation Protocol v5.1

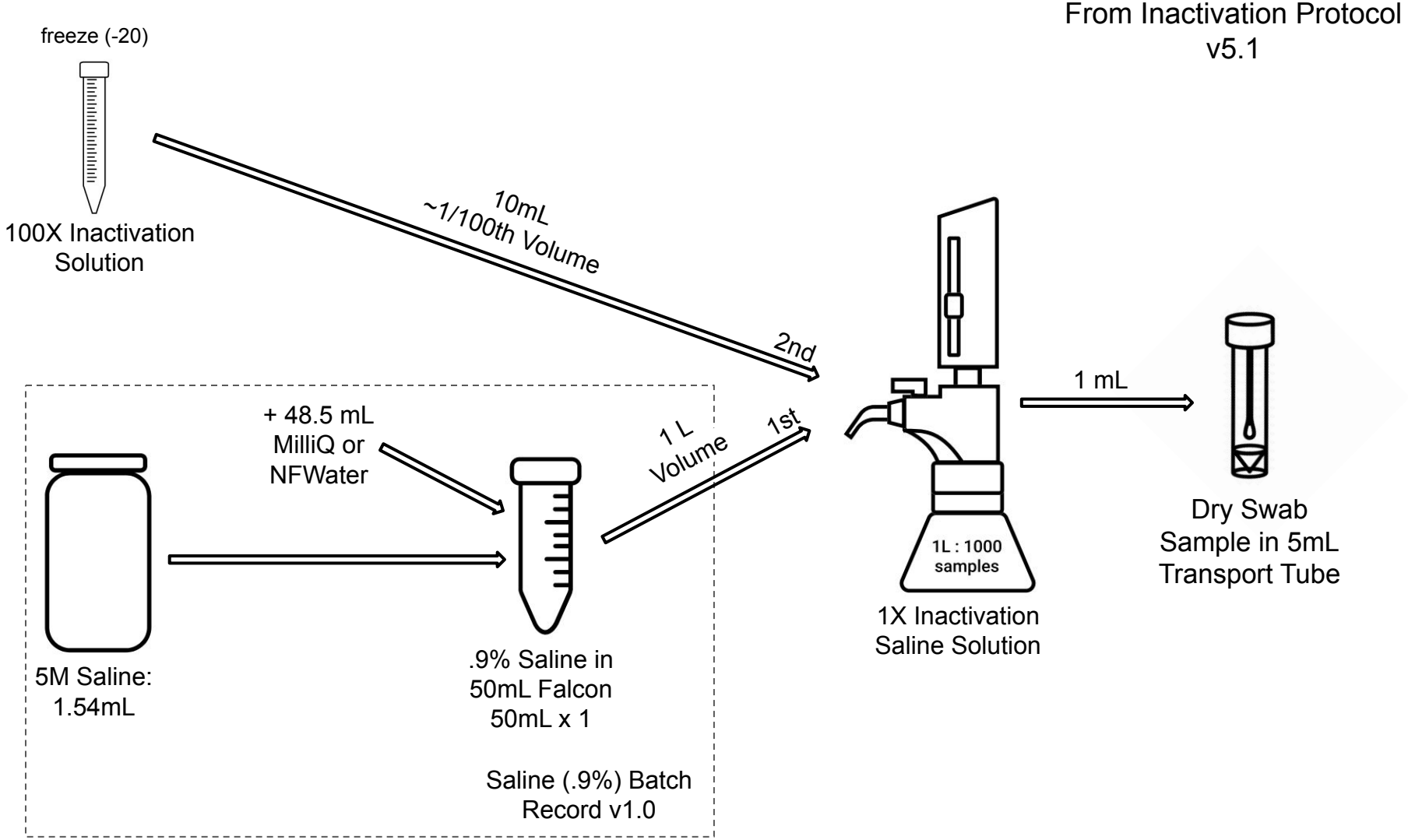



**FloodLAMP Biotechnologies, a Public Benefit Corporation**
*contact@floodlamp.bio*

# UPDATE- Keep Old

# Twist Positive Control Diagram

TPC - Twist Positive Control Batch Record v1.0

Use 2µL per Amp Reaction.

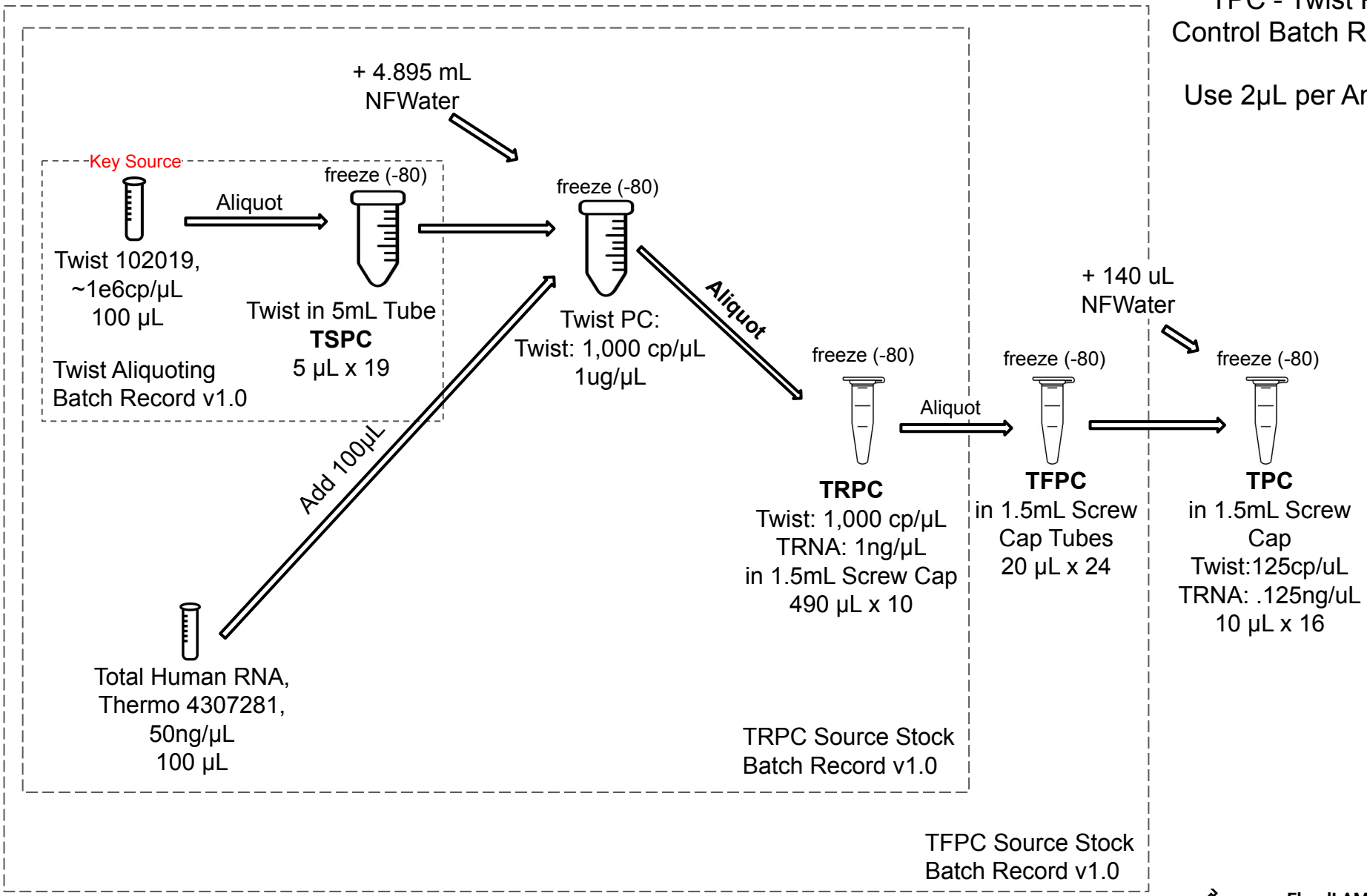



**FloodLAMP Biotechnologies, a Public Benefit Corporation**
*contact@floodlamp.bio*

# Gamma Blue Dil.
# GBD Diagram

Gamma Blue Dil Batch Record
v1.1

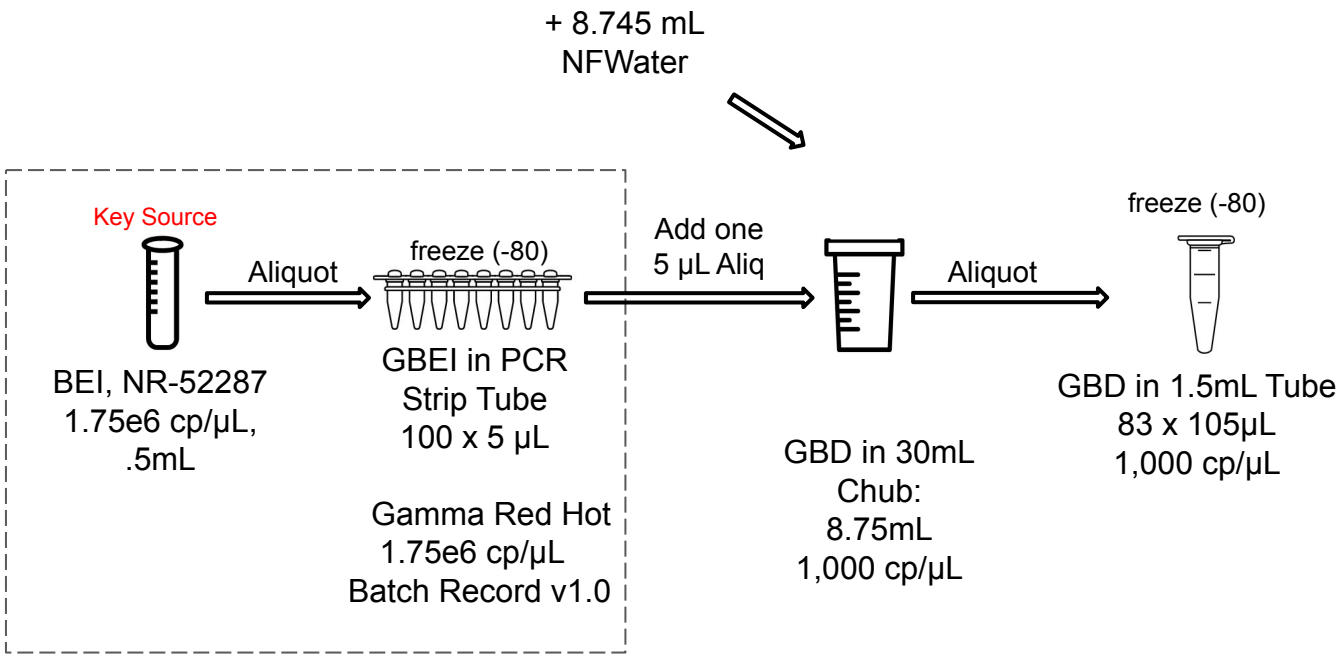


**FloodLAMP Biotechnologies,**
**a Public Benefit Corporation**
***contact@floodlamp.bio***

# Gamma 10K Dil.
# G10K Diagram

Gamma 10K Dil Batch Record
vX

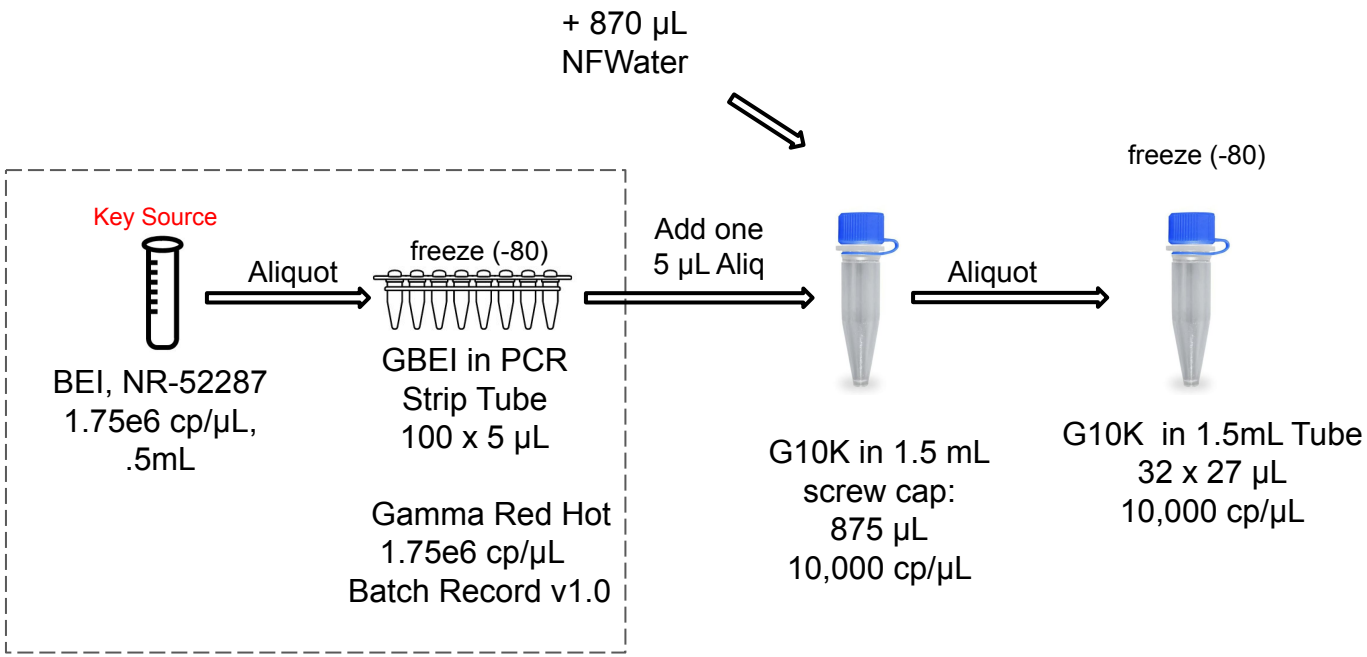



**FloodLAMP Biotechnologies,**
**a Public Benefit Corporation**
***contact@floodlamp.bio***

# Primer-Guanidine Solution Diagram

**Batch Record v2.0**

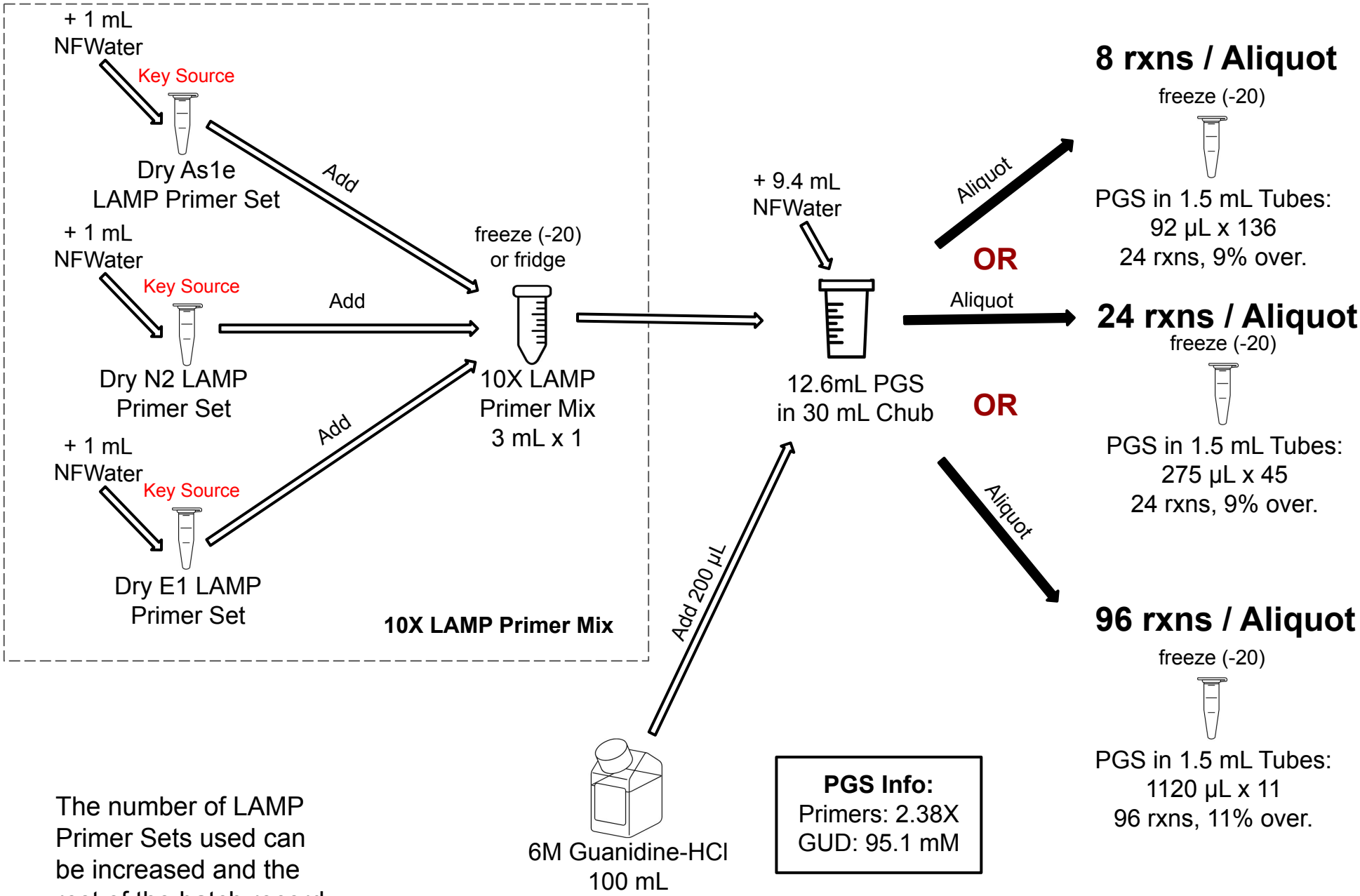


The number of LAMP Primer Sets used can be increased and the rest of the batch record increased


**FloodLAMP Biotechnologies, a Public Benefit Corporation**
*contact@floodlamp.bio*

# Colorimetric Assay Diagram

CLAMP Assay v2.5

**FIX**

## 24 rxns

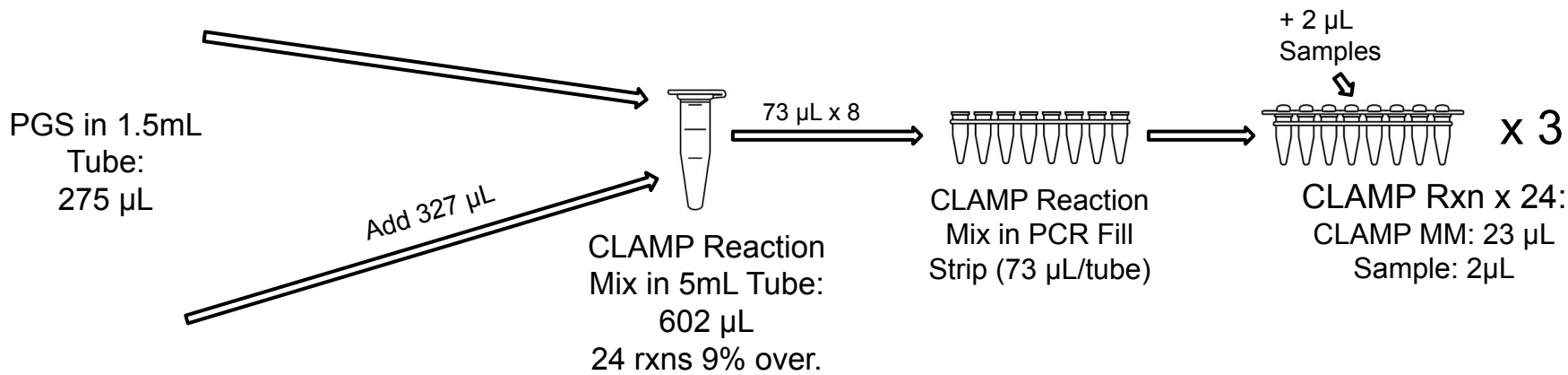


## 96 rxns

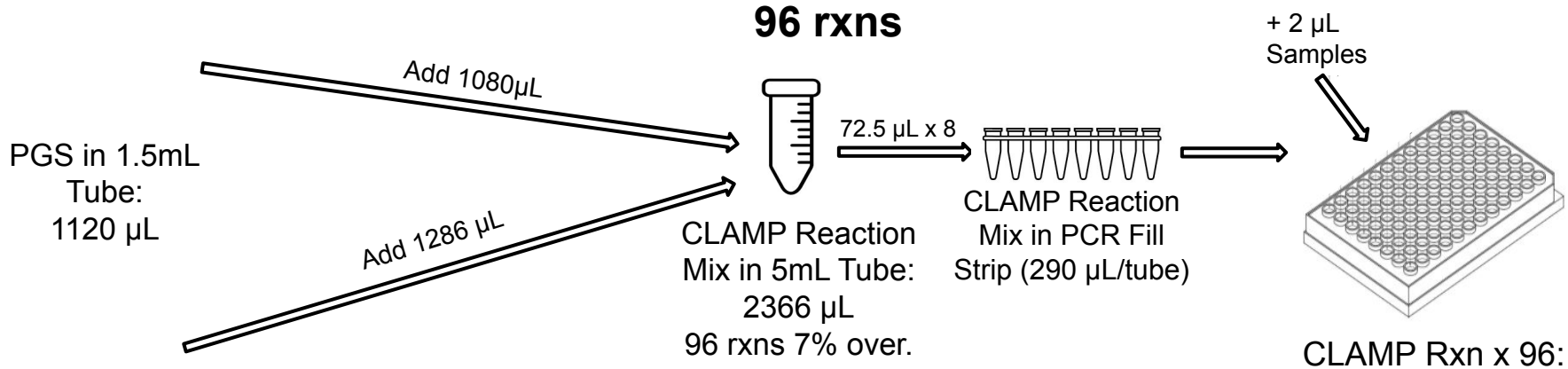



**FloodLAMP Biotechnologies, a Public Benefit Corporation**

***contact@floodlamp.bio***

# Colorimetric Assay Diagram

CLAMP Assay v2.5

**FIX**

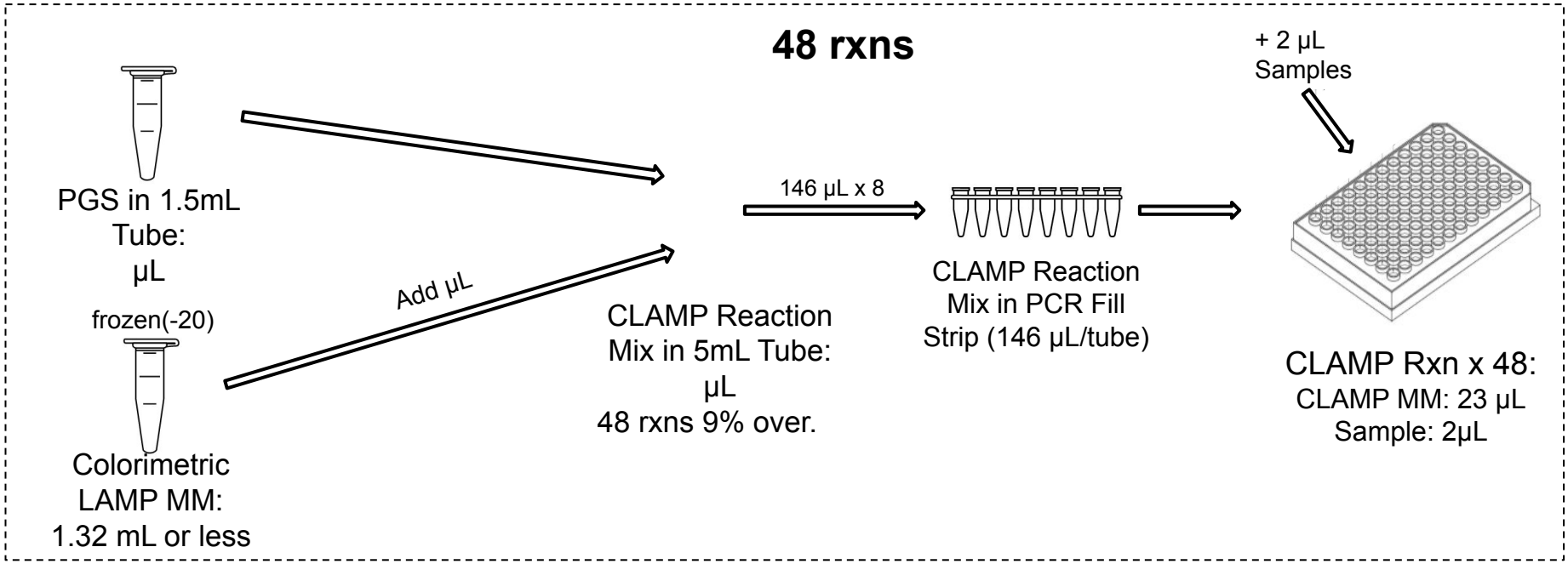



**FloodLAMP Biotechnologies, a Public Benefit Corporation**
*contact@floodlamp.bio*

Numbers need to be updated for whole Eurofins Genomics Kit

# 5X PCR Primers Diagram

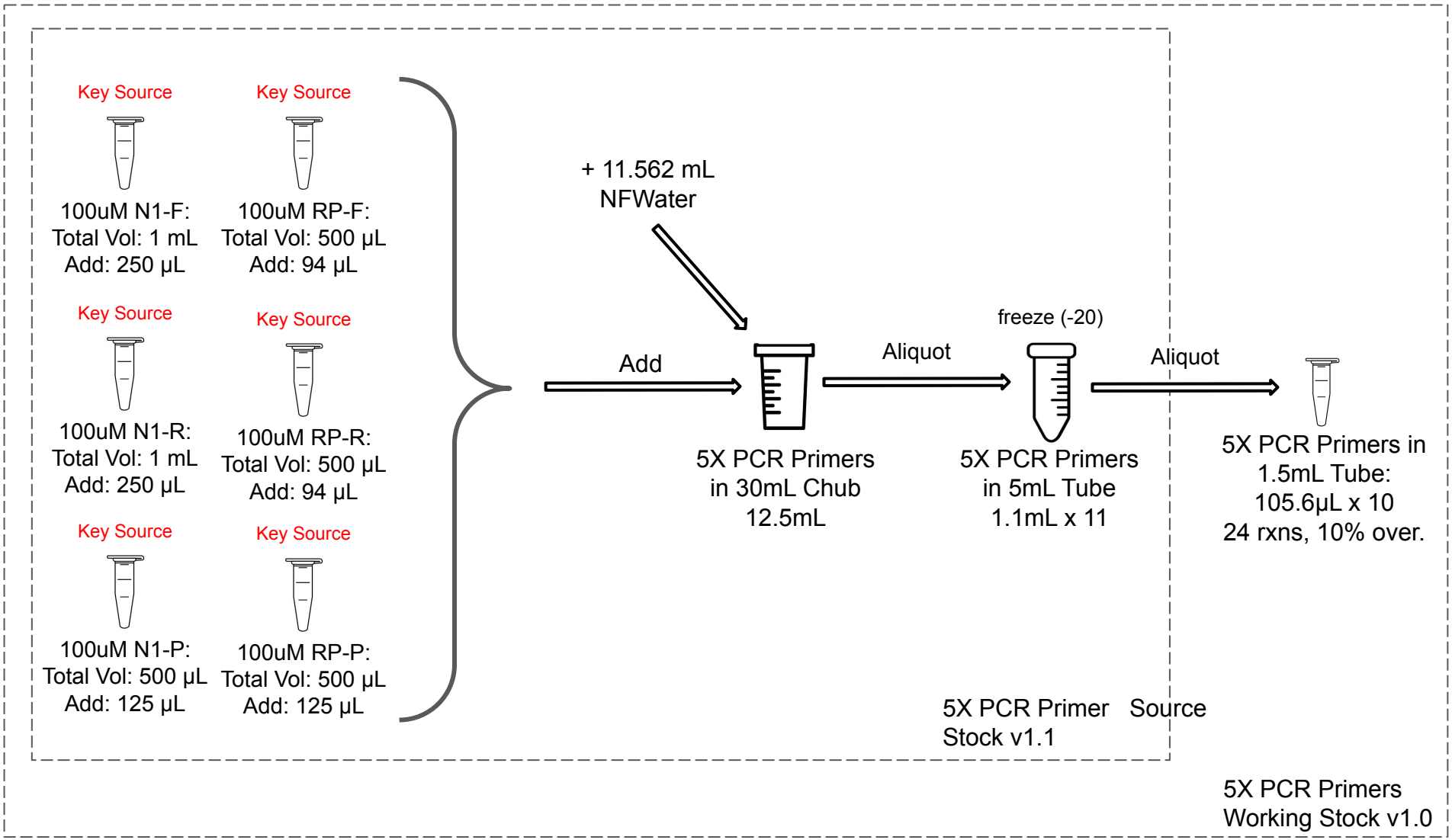



**FloodLAMP Biotechnologies, a Public Benefit Corporation**
*contact@floodlamp.bio*

# PCR Assay Diagram

PCR Assay v1.3

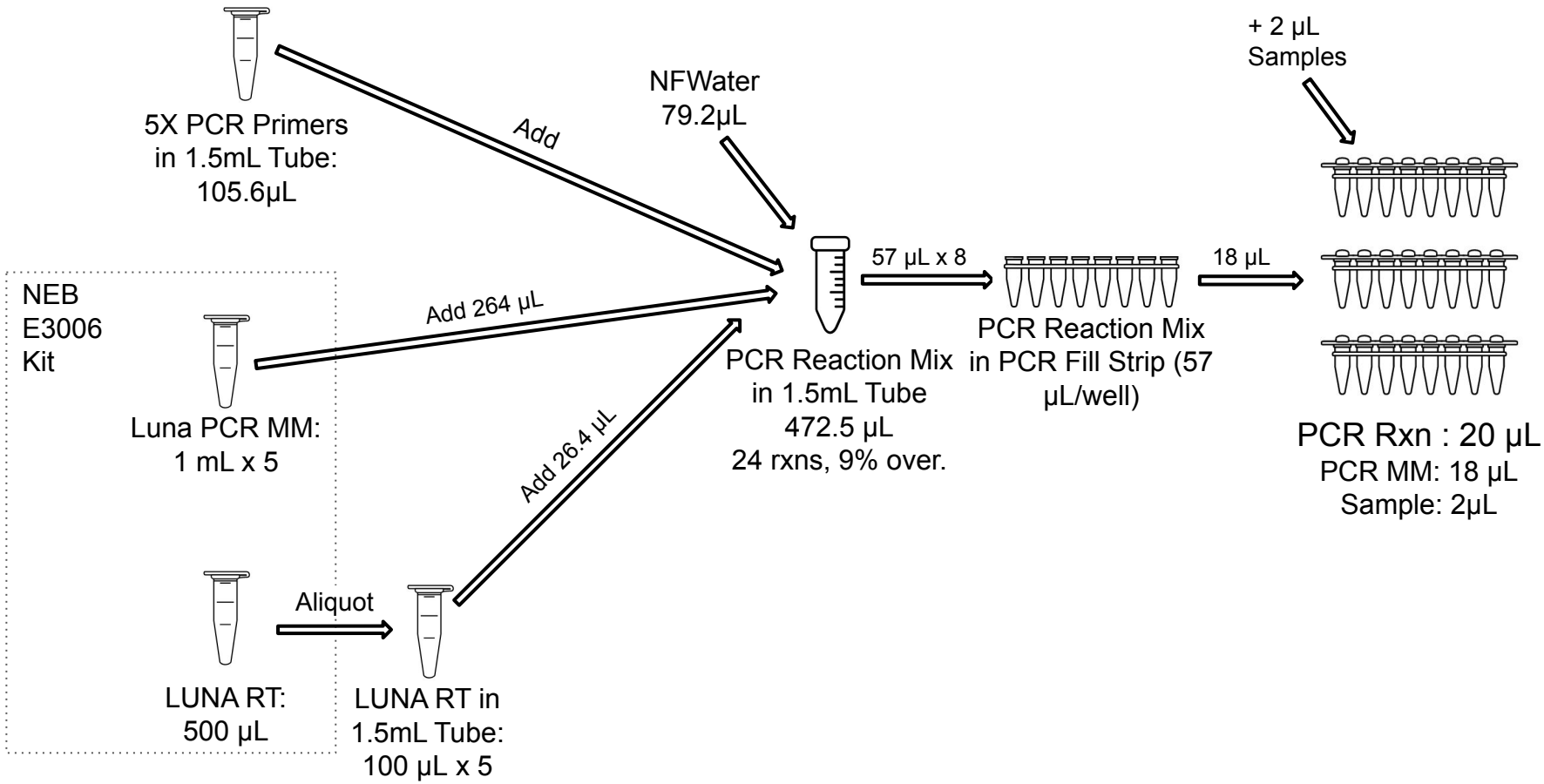



**FloodLAMP Biotechnologies,**
**a Public Benefit Corporation**
***contact@floodlamp.bio***

# EXTRA

# 100X Inactivation Solution Diagram

100X Inactivation Solution
Batch Record v1.0

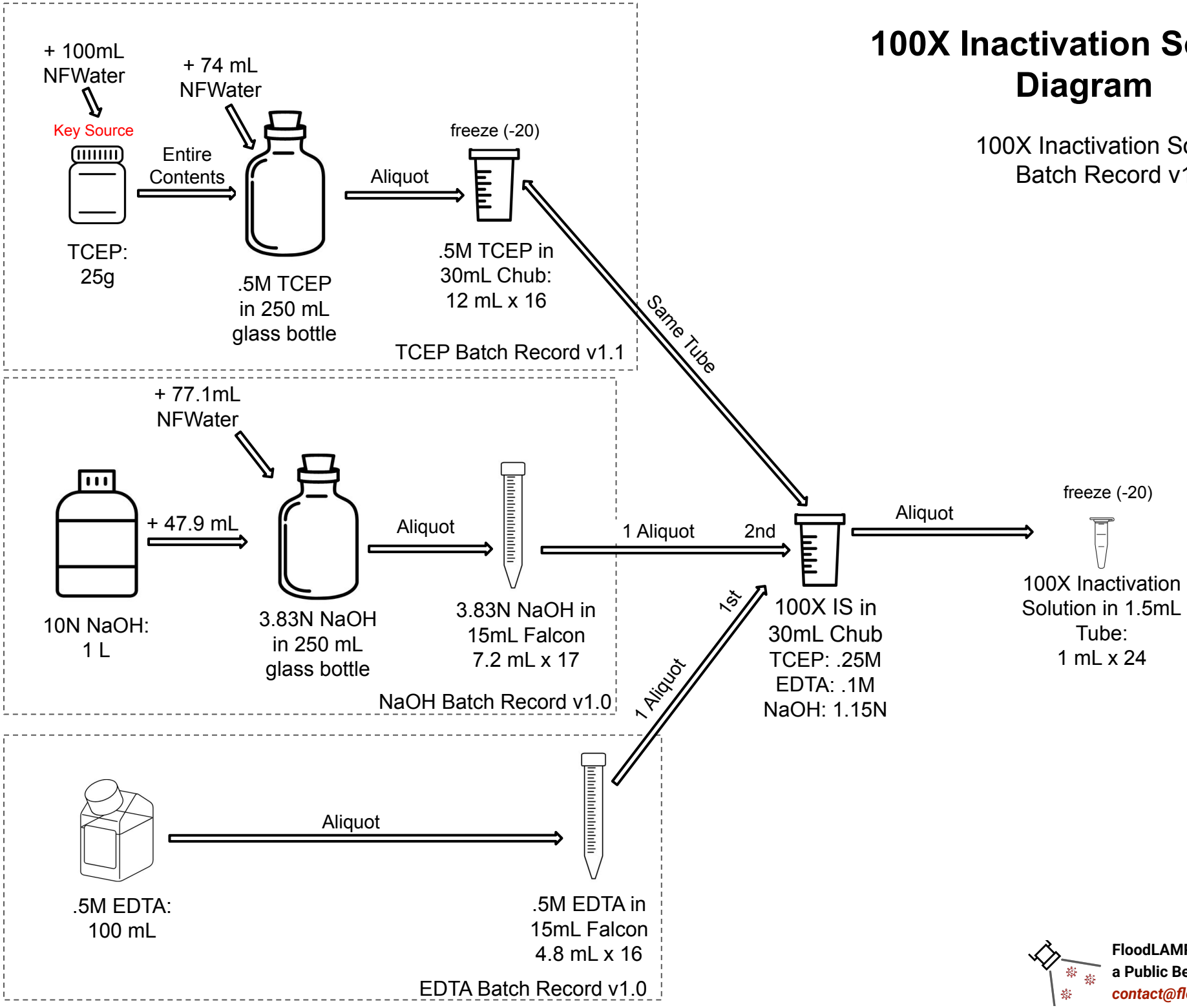



**FloodLAMP Biotechnologies, a Public Benefit Corporation**
*contact@floodlamp.bio*

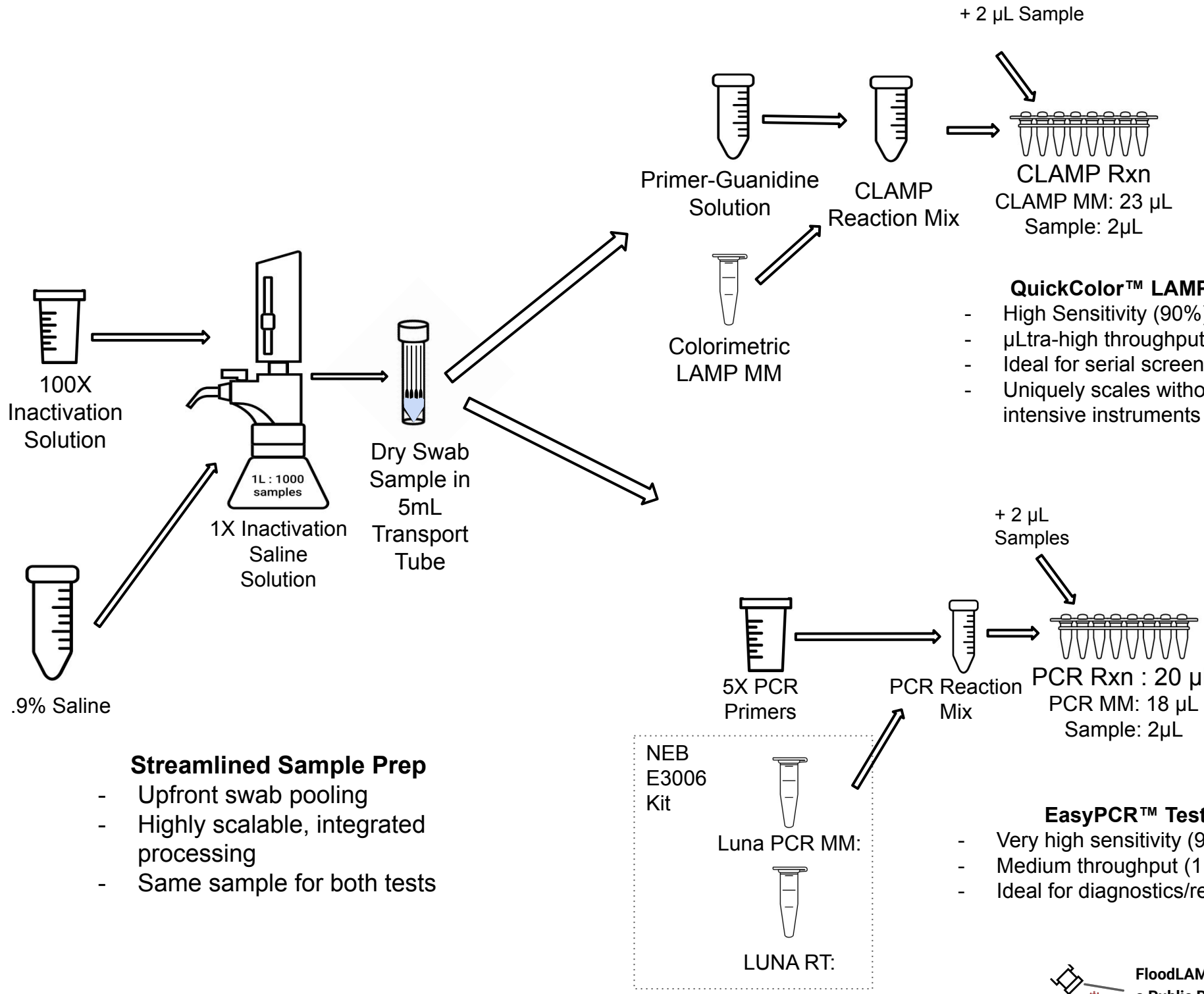


**QuickColor™ LAMP Test**

- High Sensitivity (90%)
- µLtra-high throughput
- Ideal for serial screening
- Uniquely scales without capital intensive instruments

**Streamlined Sample Prep**

- Upfront swab pooling
- Highly scalable, integrated processing
- Same sample for both tests

**EasyPCR™ Test**

- Very high sensitivity (98%)
- Medium throughput (1.5 hours/94)
- Ideal for diagnostics/reflex/confirm

**FloodLAMP Biotechnologies, a Public Benefit Corporation**
*contact@floodlamp.bio*

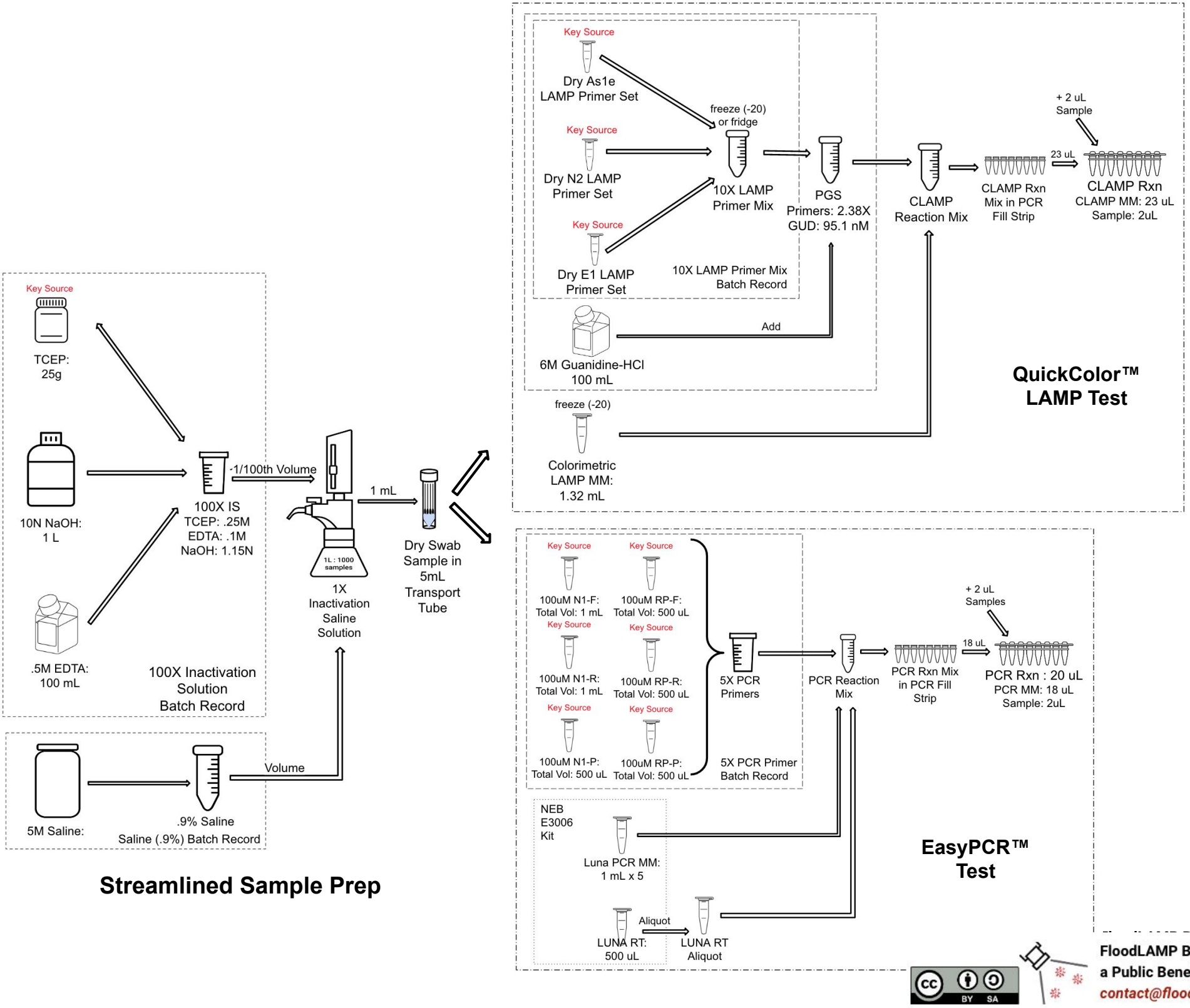
Key Source
TCEP:
25g
10N NaOH:
1 L
.5M EDTA:
100 mL
100X Inactivation
Solution
Batch Record
100X IS
TCEP: .25M
EDTA: .1M
NaOH: 1.15N
1/100th Volume
1 mL
1L : 1000 samples
1X
Inactivation
Saline
Solution
Dry Swab
Sample in
5mL
Transport
Tube
5M Saline:
.9% Saline
Saline (.9%) Batch Record
Volume
Streamlined Sample Prep
Key Source
Dry As1e
LAMP Primer Set
Key Source
Dry N2 LAMP
Primer Set
Key Source
Dry E1 LAMP
Primer Set
freeze (-20)
or fridge
10X LAMP
Primer Mix
10X LAMP Primer Mix
Batch Record
PGS
Primers: 2.38X
GUD: 95.1 nM
6M Guanidine-HCl
100 mL
Add
freeze (-20)
Colorimetric
LAMP MM:
1.32 mL
CLAMP
Reaction Mix
CLAMP Rxn
Mix in PCR
Fill Strip
23 uL
+ 2 uL
Sample
CLAMP Rxn
CLAMP MM: 23 uL
Sample: 2uL
QuickColor™
LAMP Test
Key Source
100uM N1-F:
Total Vol: 1 mL
Key Source
100uM RP-F:
Total Vol: 500 uL
Key Source
100uM N1-R:
Total Vol: 1 mL
Key Source
100uM RP-R:
Total Vol: 500 uL
Key Source
100uM N1-P:
Total Vol: 500 uL
Key Source
100uM RP-P:
Total Vol: 500 uL
5X PCR
Primers
5X PCR Primer
Batch Record
PCR Reaction
Mix
PCR Rxn Mix
in PCR Fill
Strip
18 uL
+ 2 uL
Samples
PCR Rxn : 20 uL
PCR MM: 18 uL
Sample: 2uL
NEB
E3006
Kit
Luna PCR MM:
1 mL x 5
LUNA RT:
500 uL
Aliquot
LUNA RT
Aliquot
EasyPCR™
Test
FloodLAMP Biotechnologies,
a Public Benefit Corporation
contact@floodlamp.bio

# FloodLAMP Lab Playbook

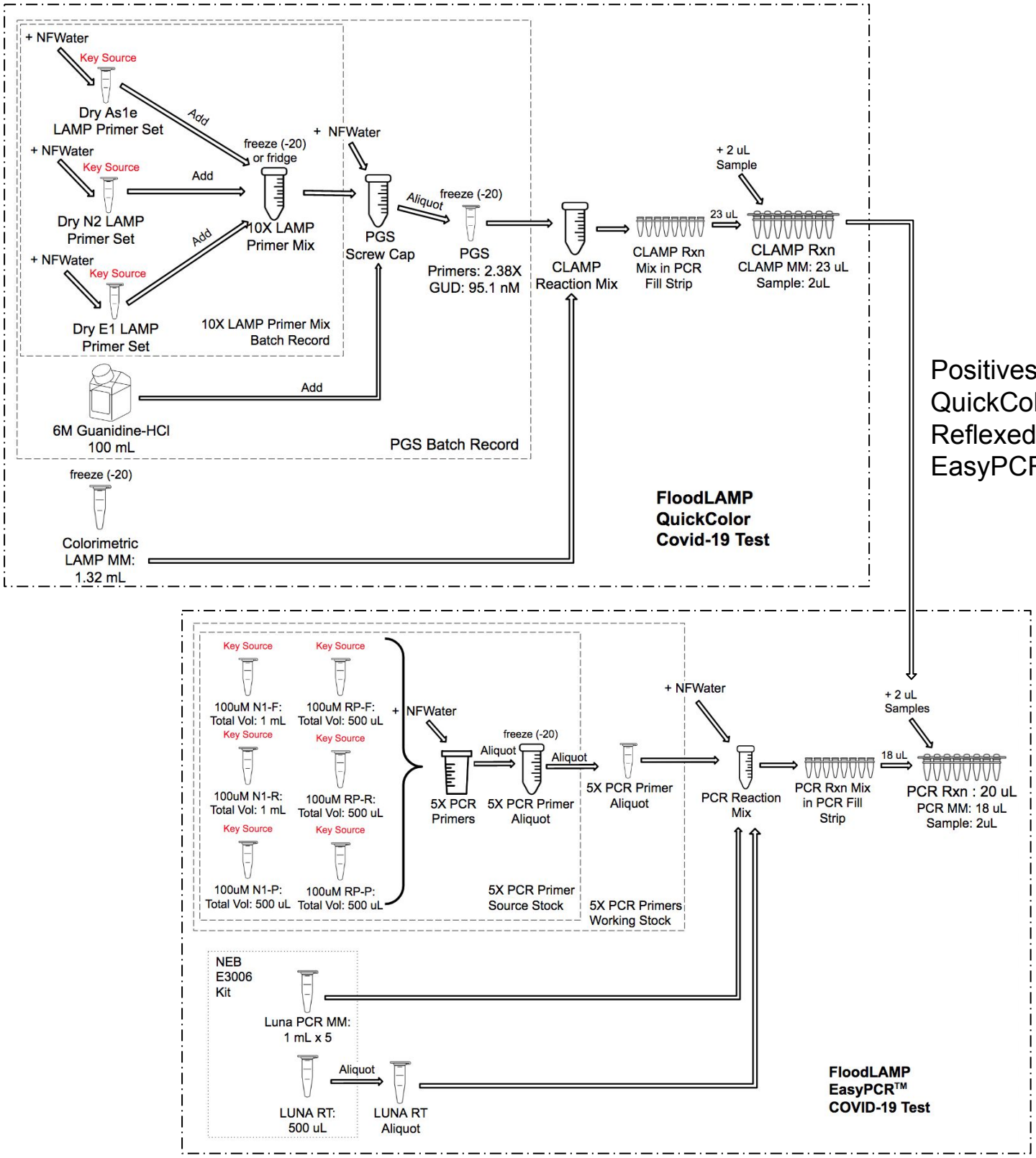


Positives or Invalids from QuickColor™ Covid-19 Test Reflexed using FloodLAMP EasyPCR™ Covid-19 Test


**FloodLAMP Biotechnologies, a Public Benefit Corporation**
*contact@floodlamp.bio*